196R–103435	REV.: 2

PART NUMBER	DESCRIPTION
301070–1	SHEET 1
301070–2	AS SHOWN

REV.	DESCRIPTION	DATE	BY

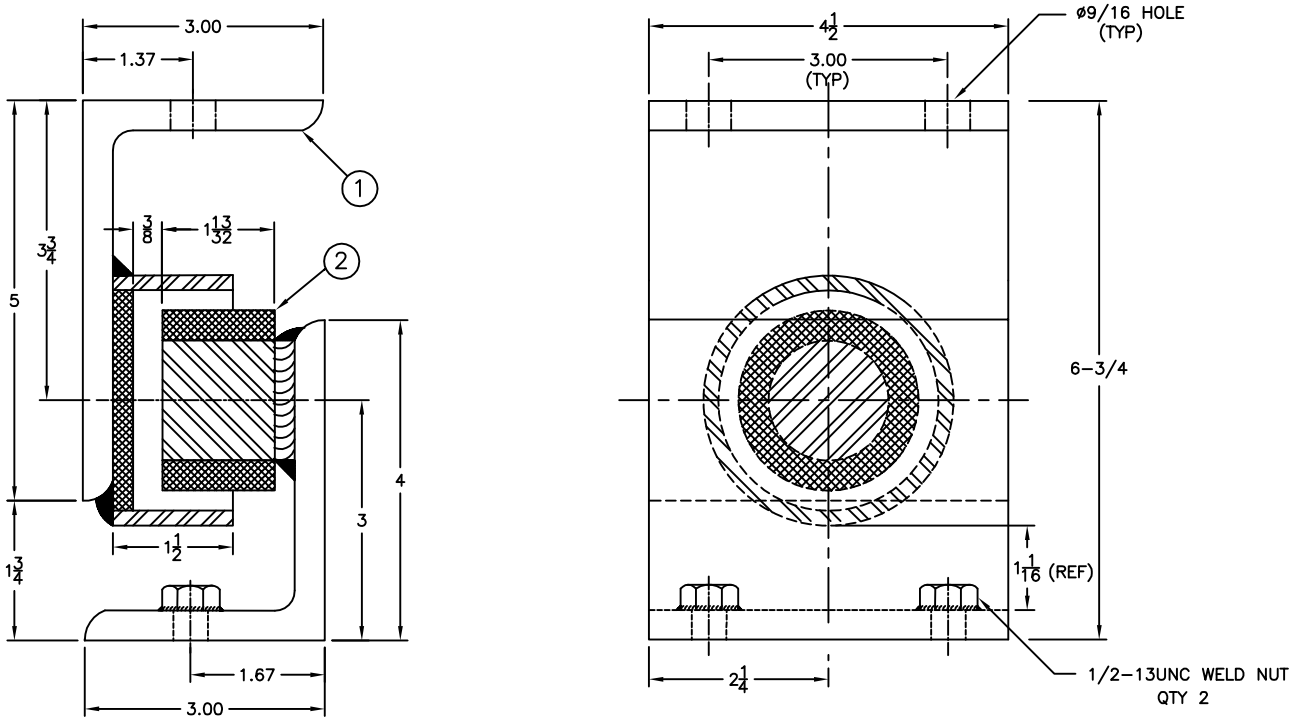

NOTES:
1. FINISH: ONE (1) COAT WATER REDUCIBLE GRAY PAINT.

QTY	ITEM NO.	PART NUMBER	DESCRIPTION	REMARKS
1	2	520465–2	SR–2A SUB ASSEMBLY # 2	
1	1	520464–2	SR–2A SUB ASSEMBLY # 1	

LIST OF MATERIALS

OTHER MATERIALS, COMPOUNDS, OR FINISHES WITH EQUAL OR SUPERIOR PROPERTIES MAY BE SUBSTITUTED AS THEY BECOME AVAILABLE.

CERTIFIED FOR:

JOB NAME: _____

CUSTOMER : _____

CUSTOMER P.O.: _____

SALES ORDER: _____

MODEL SR2A
SEISMIC SNUBBER RESTRAINT

THE VMC GROUP
The Power of Together
Bloomingdale, NJ 07403
Houston, TX 77041

SCALE : NONE

SHEET:

DRAWING NO.:

REVISION

Member VISCMA

PROPRIETARY: EXCEPT AS OTHERWISE AGREED IN WRITING, THE INFORMATION AND DESIGN DISCLOSED HEREIN ARE THE PROPERTY OF THE VMC GROUP AND MUST NOT BE COPIED OR DISTRIBUTED OUTSIDE THE VMC GROUP EXCEPT TO AUTHORIZED PERSONS WITH A GENUINE NEED TO KNOW WHO BY THE USE HEREOF ACKNOWLEDGE THE VMC GROUP'S OWNERSHIP AND AGREE TO MAINTAIN THIS INFORMATION AND DESIGN IN STRICT CONFIDENCE.