114R–103763	REV.: 1

REV.	DESCRIPTION	DATE	BY

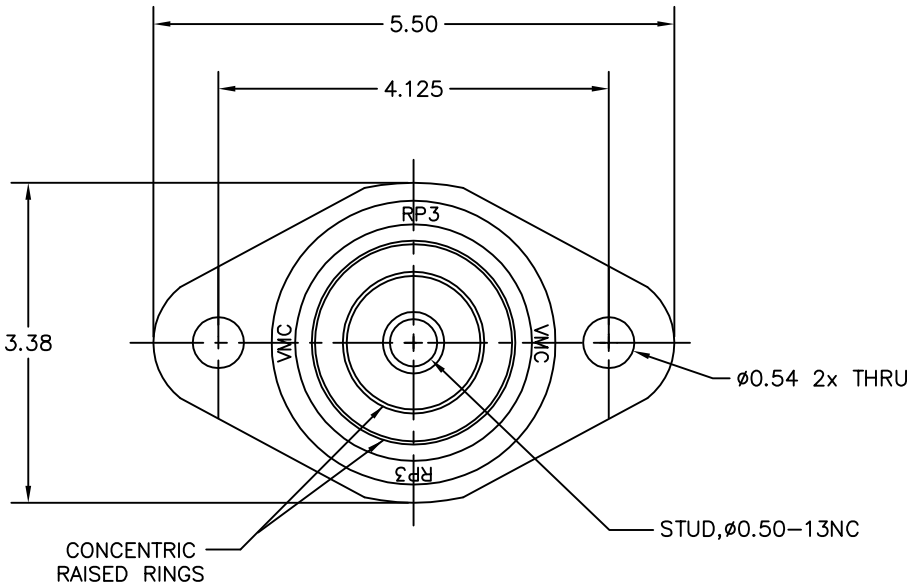

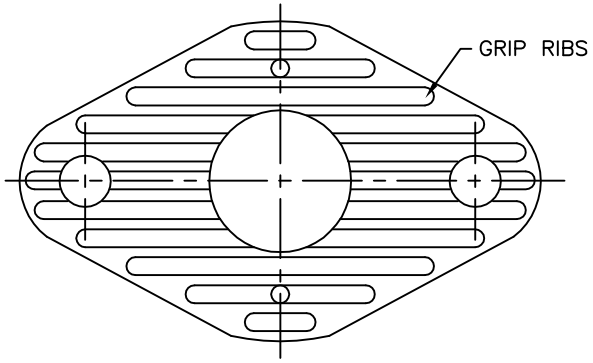

VIEW "A–A"

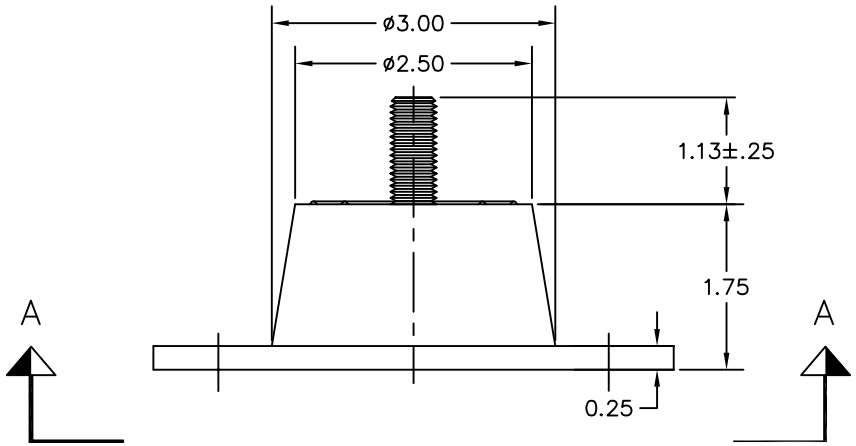

TABLE 1

PART NUMBER	MODEL	RATED AXIAL LOAD–LBS	DEFLECTION AT RATED LOAD–INCHES
114A–100415–01	RP3–BLUE–WR	200	0.25
114A–100415–02	RP3–BROWN–WR	250	0.25
114A–100415–03	RP3–RED–WR	525	0.25
114A–100415–04	RP3–GREEN–WR	750	0.25
114A–100415–05	RP3–GRAY–WR	1500	0.25
114A–100415–06	RP3–PURPLE–WR	△5	0.25

AXIAL TO RADIAL SPRING RATE (K) RATIO 3:1 NOMINAL

NOTES:
1. DIMENSIONS FOR CUSTOMER REFERENCE
2. TABLE 1 IS AVERAGE DESIGN DATA FOR REFERENCE.
3. MOLDED STEEL AND ELASTOMER MOUNT FOR NON–FAIL SAFE, OUTDOOR SERVICE CONDITIONS.
4. CONSULT VMC FOR APPLICABILITY
5. △5 CONTACT VMC FOR APPLICABLE RATED LOAD

OTHER MATERIALS, COMPOUNDS, OR FINISHES WITH EQUAL OR SUPERIOR PROPERTIES MAY BE SUBSTITUTED AS THEY BECOME AVAILABLE.

CERTIFIED FOR:

JOB NAME: _____

CUSTOMER : _____

CUSTOMER P.O.: _____

SALES ORDER: _____

MODEL RP3 200-1500 LBS.
DURULENE ELASTOMERIC ISOLATOR
WITH POSITIONING PIN
0.25 INCH DEFLECTION

THE VMC GROUP
The Power of Together
Bloomingdale, NJ 07403
Houston, TX 77041

SCALE : NONE

SHEET:

DRAWING NO.:

REVISION

Member VISCMA

PROPRIETARY: EXCEPT AS OTHERWISE AGREED IN WRITING, THE INFORMATION AND DESIGN DISCLOSED HEREIN ARE THE PROPERTY OF THE VMC GROUP AND MUST NOT BE COPIED OR DISTRIBUTED OUTSIDE THE VMC GROUP EXCEPT TO AUTHORIZED PERSONS WITH A GENUINE NEED TO KNOW WHO BY THE USE HEREOF ACKNOWLEDGE THE VMC GROUP'S OWNERSHIP AND AGREE TO MAINTAIN THIS INFORMATION AND DESIGN IN STRICT CONFIDENCE.