SMA TYPE

— Block Type —

part number structure example

SMSA | **25** | **G** | **UU**

specification

SMA	standard
SMSA	anticorrosion

inner contact diameter

seal

blank	without seal
UU	seals on both sides

retainer material

	standard	anti-corrosion
blank	steel	stainless
G	resin	

part number	inner contact diameter		major dimensions						
			outer dimensions						
		tolerance	h	E	W	L	F	G	T
	mm	μm	mm	mm	mm	mm	mm	mm	mm
SMA 3GUU	3	0 −8	5	8	16	13	10	8	—
SMA 4GUU	4		5.5	8.5	17	15	11	9	—
SMA 5GUU	5		7	11	22	18	14	11	—
SMA 6GUU	6	0 −9	9	15	30	25	18	15	6
SMA 8GUU	8		11	17	34	30	22	18	6
SMA10GUU	10		13	20	40	35	26	21	8
SMA12GUU	12		15	21	42	36	28	24	8
SMA13GUU	13		15	22	44	39	30	24.5	8
SMA16GUU	16		19	25	50	44	38.5	32.5	9
SMA20GUU	20	0 −10	21	27	54	50	41	35	11
SMA25GUU	25		26	38	76	67	51.5	42	12
SMA30GUU	30		30	39	78	72	59.5	49	15
SMA35GUU	35	0 −12	34	45	90	80	68	54	18
SMA40GUU	40		40	51	102	90	78	62	20
SMA50GUU	50		52	61	122	110	102	80	25
SMA60GUU	60	0/−15	58	66	132	122	114	94	30

ISOTECH, inc.
2299 Amber Dr. Suite 120, Hatfield PA 19440
Toll Free: 800-314-3332 Fax: 215-631-9148

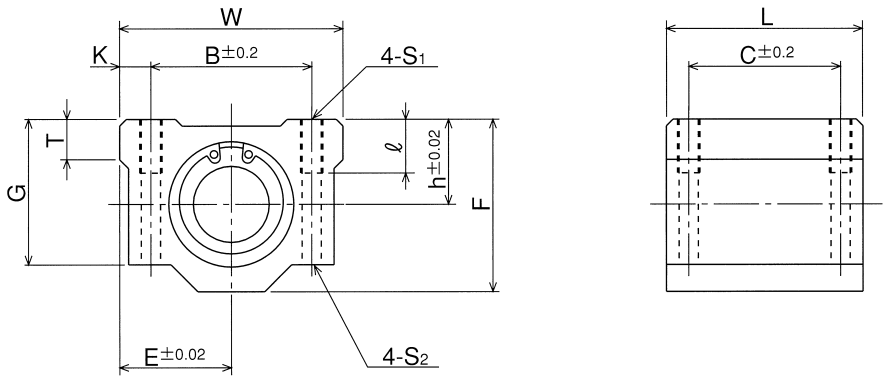

mounting dimensions						basic load rating		mass	part number
						dynamic	static		
B	C	K	S_1	ℓ	S_2	C	Co		
mm	mm	mm		mm	mm	N	N	g	
11	8	2.5	M 2	–	–	69	105	5	SMA 3GUU
12	10	2.5	M 3	–	–	88	127	7	SMA 4GUU
16	12	3	M 3	–	–	167	206	14	SMA 5GUU
20	15	5	M 4	8	3.4	206	265	34	SMA 6GUU
24	18	5	M 4	8	3.4	274	392	52	SMA 8GUU
28	21	6	M 5	12	4.3	372	549	92	SMA10GUU
30.5	26	5.75	M 5	12	4.3	510	784	102	SMA12GUU
33	26	5.5	M 5	12	4.3	510	784	120	SMA13GUU
36	34	7	M 5	12	4.3	774	1,180	200	SMA16GUU
40	40	7	M 6	12	5.2	882	1,370	255	SMA20GUU
54	50	11	M 8	18	7	980	1,570	600	SMA25GUU
58	58	10	M 8	18	7	1,570	2,740	735	SMA30GUU
70	60	10	M 8	18	7	1,670	3,140	1,100	SMA35GUU
80	60	11	M10	25	8.7	2,160	4,020	1,590	SMA40GUU
100	80	11	M10	25	8.7	3,820	7,940	3,340	SMA50GUU
108	90	12	M12	25	10.7	4,700	10,000	4,270	SMA60GUU

1N≒0.102kgf

ISOTECH, inc.
2299 Amber Dr. Suite 120, Hatfield PA 19440
Toll Free: 800-314-3332 Fax: 215-631-9148

SMA-W TYPE

− Double-Wide Block Type −

part number structure example

SMSA 25 G W UU

specification

SMA	standard
SMSA	anticorrosion

inner contact diameter

retainer material

	standard	anti-corrosion
blank	steel	stainless
G	resin	

seal

blank	without seal
UU	seals on both sides

double-wide type

part number	inner contact diameter		outer dimensions					major dimensions		
		tolerance	h	E	W	L	F	G	T	N
	mm	μm	mm	mm	mm	mm	mm	mm	mm	mm
SMA 3GWUU	3	0 −8	5	8	16	23	10	8	−	−
SMA 4GWUU	4		5.5	8.5	17	27	11	9	−	−
SMA 5GWUU	5		7	11	22	33	14	11	−	−
SMA 6GWUU	6	0 −9	9	15	30	48	18	15	6	7
SMA 8GWUU	8		11	17	34	58	22	18	6	7
SMA10GWUU	10		13	20	40	68	26	21	8	7
SMA12GWUU	12		15	21	42	70	28	24	8	6.5
SMA13GWUU	13		15	22	44	75	30	24.5	8	6.5
SMA16GWUU	16		19	25	50	85	38.5	32.5	9	6
SMA20GWUU	20	0 −10	21	27	54	96	41	35	11	7
SMA25GWUU	25		26	38	76	130	51.5	42	12	4
SMA30GWUU	30		30	39	78	140	59.5	49	15	5
SMA35GWUU	35	0 −12	34	45	90	155	68	54	18	5.5
SMA40GWUU	40		40	51	102	175	78	62	20	5
SMA50GWUU	50		52	61	122	215	102	80	25	5
SMA60GWUU	60	0/−15	58	66	132	240	114	94	30	5

ISOTECH, inc.
2299 Amber Dr. Suite 120, Hatfield PA 19440
Toll Free: 800-314-3332 Fax: 215-631-9148

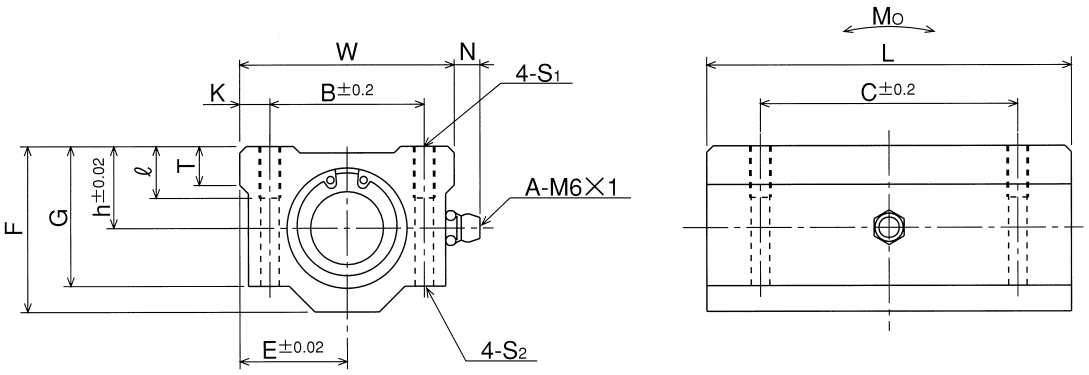

mounting dimensions						basic load rating		allowable static moment	mass	part number
						dynamic	static			
B	C	K	S_1	ℓ	S_2	C	Co	Mo		
mm	mm	mm		mm	mm	N	N	N・m	g	
11	16	2.5	M 2	–	–	108	206	0.49	10	SMA 3GWUU
12	20	2.5	M 3	–	–	137	255	0.72	13	SMA 4GWUU
16	25	3	M 3	–	–	265	412	1.54	27	SMA 5GWUU
20	36	5	M 4	8	3.4	323	530	2.18	63	SMA 6GWUU
24	42	5	M 4	8	3.4	431	784	4.31	102	SMA 8GWUU
28	46	6	M 5	12	4.3	588	1,100	7.24	180	SMA10GWUU
30.5	50	5.75	M 5	12	4.3	813	1,570	10.9	205	SMA12GWUU
33	50	5.5	M 5	12	4.3	813	1,570	11.6	240	SMA13GWUU
36	60	7	M 5	12	4.3	1,230	2,350	19.7	400	SMA16GWUU
40	70	7	M 6	12	5.2	1,400	2,740	26.8	570	SMA20GWUU
54	100	11	M 8	18	7	1,560	3,140	43.4	1,200	SMA25GWUU
58	110	10	M 8	18	7	2,490	5,490	82.8	1,480	SMA30GWUU
70	120	10	M 8	18	7	2,650	6,270	110	2,200	SMA35GWUU
80	140	11	M10	25	8.7	3,430	8,040	147	3,200	SMA40GWUU
100	160	11	M10	25	8.7	6,080	15,900	397	6,700	SMA50GWUU
108	180	12	M12	25	10.7	7,550	20,000	530	8,560	SMA60GWUU

1N≒0.102kgf 1N・m≒0.102kgf・m

ISOTECH, inc.
2299 Amber Dr. Suite 120, Hatfield PA 19440
Toll Free: 800-314-3332 Fax: 215-631-9148

AK TYPE

− Compact Block Type −

part number structure example

AKS | **25** | **G** | **UU**

specification

AK	standard
AKS	anticorrosion

inner contact diameter

seal

blank	without seal
UU	seals on both sides

retainer material

	standard	anticorrosion
blank	steel	stainless
G	resin	

part number	inner contact diameter		outer dimensions					major dimensions	
		tolerance	h	E	W	L	F	L_2	S_1
	mm	μm	mm	mm	mm	mm	mm	mm	
AK 6GUU	6	0 −9	14	8	16	27	22	18	M 4
AK 8GUU	8		16	10	20	32	26	20	M 5
AK10GUU	10		19	13	26	39	32	27	M 6
AK12GUU	12		20	14	28	40	34	27	M 6
AK13GUU	13		25	15	30	42	43	28	M 6
AK16GUU	16		27	18	36	47	49	32	M 6
AK20GUU	20	0 −10	31	21	42	52	54	36	M 8
AK25GUU	25		37	26	52	69	65	42	M10
AK30GUU	30		40	29	58	74	71	44	M10

ISOTECH, inc.

2299 Amber Dr. Suite 120, Hatfield PA 19440
Toll Free: 800-314-3332 Fax: 215-631-9148

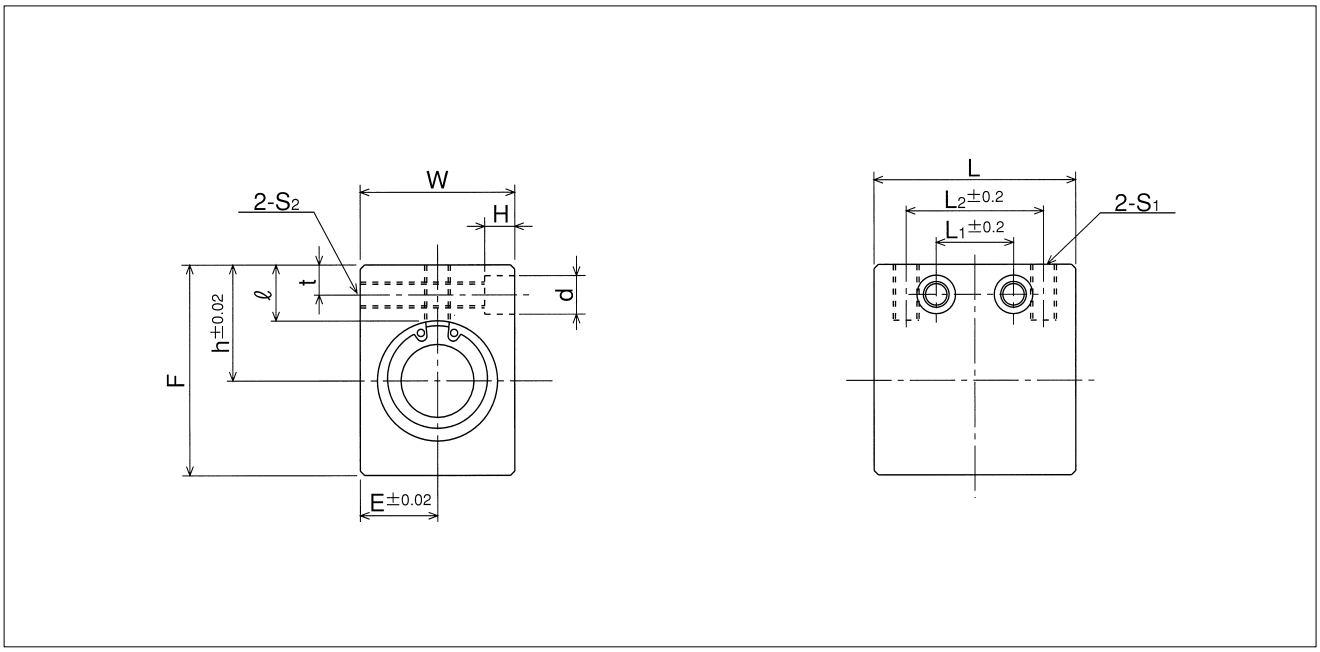

mounting dimensions						basic load rating		mass	part number
						dynamic	static		
ℓ	L_1	t	S_2	d	H	C	Co		
mm	mm	mm		mm	mm	N	N	g	
8	9	5	M 4	6	5	206	265	21.5	**AK 6GUU**
8.5	10	5	M 4	6	5	274	392	40	**AK 8GUU**
9.5	15	6	M 5	8	6	372	549	80	**AK10GUU**
9.5	15	6	M 5	8	6	510	784	90	**AK12GUU**
13.5	16	7	M 6	9	7	510	784	132	**AK13GUU**
13	18	7	M 6	9	7	774	1,180	204	**AK16GUU**
15	18	8	M 8	11	8	882	1,370	272	**AK20GUU**
17	22	9	M10	14	10	980	1,570	574	**AK25GUU**
17.5	22	9	M10	14	10	1,570	2,740	710	**AK30GUU**

1N≒0.102kgf

ISOTECH, inc.
2299 Amber Dr. Suite 120, Hatfield PA 19440
Toll Free: 800-314-3332 Fax: 215-631-9148

AK-W TYPE

– Double-Wide Compact Block Type –

part number structure example

AKS | **25** | **G** | **W** | **UU**

specification

AK	standard
AKS	anticorrosion

inner contact diameter

retainer material

	standard	anticorrosion
blank	steel	stainless
G	resin	

double-wide type

seal

blank	without seal
UU	seals on both sides

part number	inner contact diameter		outer dimensions					major dimensions		
		tolerance	h	E	W	L	F	L_2	S_1	ℓ
	mm	μm	mm	mm	mm	mm	mm	mm		mm
AK 6GWUU	6	0 −9	14	8	16	46	22	20	M 4	8
AK 8GWUU	8		16	10	20	56	26	30	M 5	8.5
AK10GWUU	10		19	13	26	68	32	36	M 6	9.5
AK12GWUU	12		20	14	28	70	34	36	M 6	9.5
AK13GWUU	13		25	15	30	74	43	42	M 6	13.5
AK16GWUU	16		27	18	36	84	49	52	M 6	13
AK20GWUU	20	0 −10	31	21	42	94	54	58	M 8	15
AK25GWUU	25		37	26	52	128	65	80	M10	17
AK30GWUU	30		40	29	58	138	71	90	M10	17.5

ISOTECH, inc.
2299 Amber Dr. Suite 120, Hatfield PA 19440
Toll Free: 800-314-3332 Fax: 215-631-9148

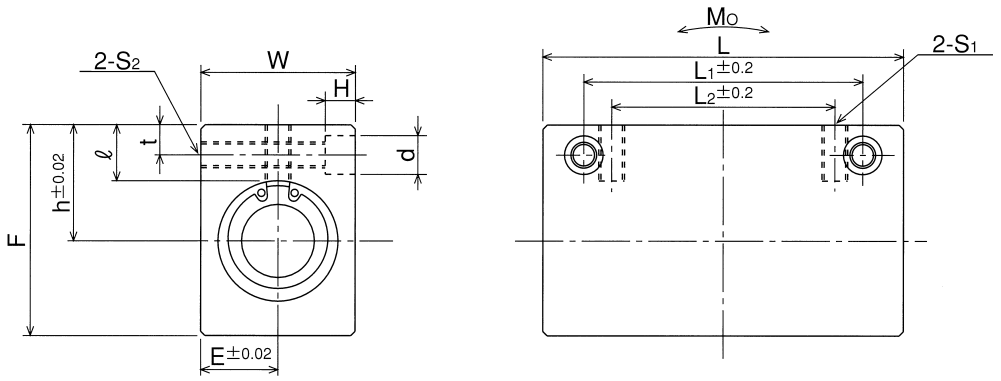

mounting dimensions					basic load rating		allowable static moment	mass	part number
					dynamic	static			
L_1	t	S_2	d	H	C	Co	Mo		
mm	mm		mm	mm	N	N	N・m	g	
30	5	M 4	6	5	323	530	2.18	40	**AK 6GWUU**
42	5	M 4	6	5	431	784	4.31	75	**AK 8GWUU**
50	6	M 5	8	6	588	1,100	7.24	150	**AK10GWUU**
50	6	M 5	8	6	813	1,570	10.9	168	**AK12GWUU**
55	7	M 6	9	7	813	1,570	11.6	248	**AK13GWUU**
65	7	M 6	9	7	1,230	2,350	19.7	383	**AK16GWUU**
70	8	M 8	11	8	1,400	2,740	26.8	520	**AK20GWUU**
100	9	M10	14	10	1,560	3,140	43.4	1,120	**AK25GWUU**
110	9	M10	14	10	2,490	5,490	82.8	1,384	**AK30GWUU**

1N≒0.102kgf 1N・m≒0.102kgf・m

ISOTECH, inc.
2299 Amber Dr. Suite 120, Hatfield PA 19440
Toll Free: 800-314-3332 Fax: 215-631-9148

SMB TYPE

– Block Type –

part number structure example

SMSB | **25** | **G** | **UU**

specification

SMB	standard
SMSB	anticorrosion

inner contact diameter

seal

blank	without seal
UU	seals on both sides

retainer material

	standard	anticorrosion
blank	steel	stainless
G	resin	

part number	inner contact diameter		outer dimensions						major dimensions
		tolerance	h	E	W	L	F	G	T
	mm	μm	mm	mm	mm	mm	mm	mm	mm
SMB13GUU	13	0 / −9	16	22	44	39	31	22	8
SMB16GUU	16		19	25	50	49	37	28	9
SMB20GUU	20	0 / −10	21	27	54	55	41	31	11
SMB25GUU	25		26	38	76	73	51	38	12
SMB30GUU	30		30	39	78	80	57	45	15
SMB40GUU	40	0/−12	40	51	102	96	75	59	22

ISOTECH, inc.
2299 Amber Dr. Suite 120, Hatfield PA 19440
Toll Free: 800-314-3332 Fax: 215-631-9148

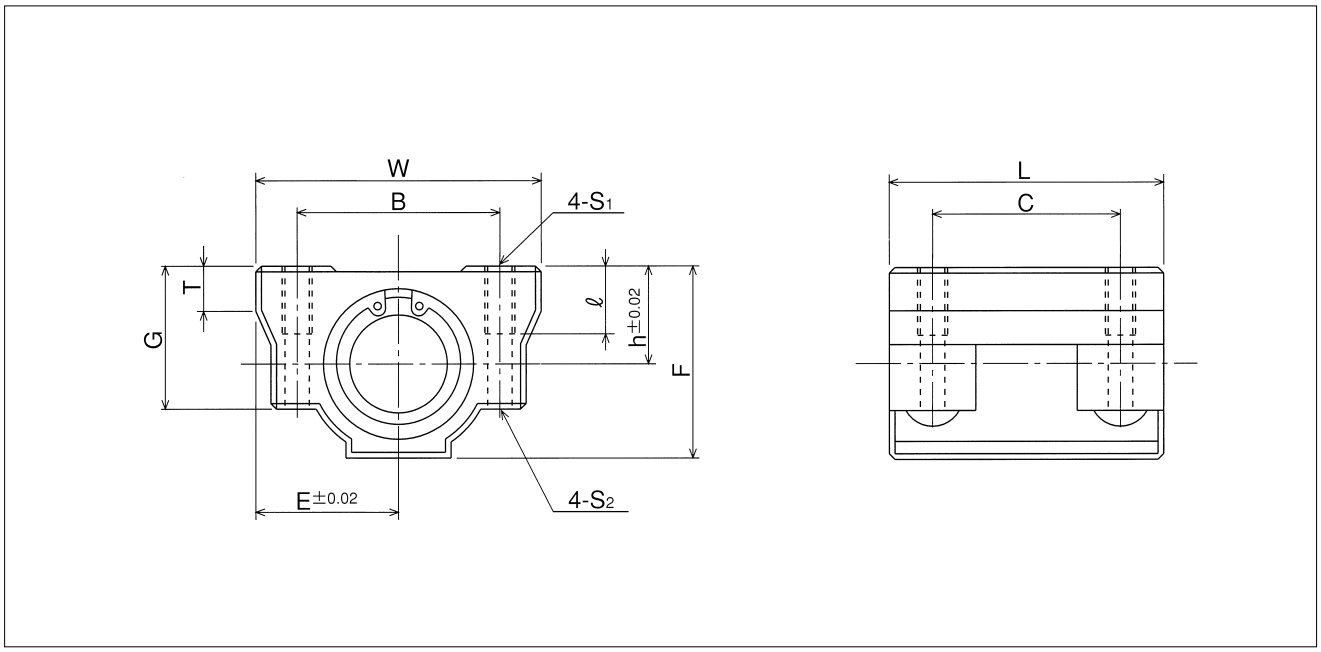

mounting dimensions					basic load rating		mass	part number
					dynamic	static		
B	C	S_1	ℓ	S_2	C	Co		
mm	mm		mm	mm	N	N	g	
33	26	M 5	10	4.3	510	784	120	**SMB13GUU**
36	34	M 5	12	4.3	774	1,180	170	**SMB16GUU**
40	40	M 6	12	5.1	882	1,370	210	**SMB20GUU**
54	50	M 8	18	6.8	980	1,570	500	**SMB25GUU**
58	58	M 8	18	6.8	1,570	2,740	600	**SMB30GUU**
80	60	M10	25	8.6	2,160	4,020	1,200	**SMB40GUU**

1N≒0.102kgf

ISOTECH, inc.
2299 Amber Dr. Suite 120, Hatfield PA 19440
Toll Free: 800-314-3332 Fax: 215-631-9148

SMP TYPE

– Pillow Block Type –

part number structure example

SMP | **25** | **G** | **UU**

SMP type

inner contact diameter

seal

blank	without seal
UU	seals on both sides

retainer material

blank	steel
G	resin

part number	inner contact diameter		outer dimensions						major dimensions
		tolerance	h	E	W	L	F	G	M
	mm	μm	mm	mm	mm	mm	mm	mm	mm
SMP13GUU	13	0 / −9	25	25	50	32	46	8	36
SMP16GUU	16		29	27.5	55	37	53	10	40
SMP20GUU	20	0 / −10	34	32.5	65	42	62	12	48
SMP25GUU	25		40	38	76	59	73	12	59
SMP30GUU	30		45	42.5	85	64	84	15	69
SMP35GUU	35	0 / −12	50	49	98	70	94	15	76
SMP40GUU	40		60	62	124	80	112	18	86
SMP50GUU	50		70	72	144	100	134	20	105
SMP60GUU	60	0/−15	82	84.5	169	110	154	23	115

ISOTECH, inc.

2299 Amber Dr. Suite 120, Hatfield PA 19440
Toll Free: 800-314-3332 Fax: 215-631-9148

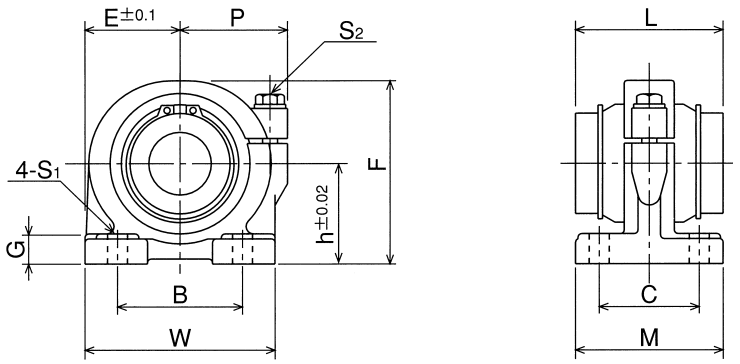

	mounting dimensions			adjustment bolt size	basic load rating		mass	part number
					dynamic	static		
P	B	C	S_1(bolt size)	S_2	C	Co		
mm	mm	mm	mm		N	N	g	
30	30	26	7(M 5)	M 5	510	784	270	**SMP13GUU**
32	35	29	7(M 5)	M 5	774	1,180	380	**SMP16GUU**
37	40	35	8(M 6)	M 6	882	1,370	680	**SMP20GUU**
43	50	40	8(M 6)	M 6	980	1,570	1,000	**SMP25GUU**
49	58	46	10(M 8)	M 8	1,570	2,740	1,400	**SMP30GUU**
58	62	53	12(M10)	M10	1,670	3,140	2,100	**SMP35GUU**
68	76	64	12(M10)	M10	2,160	4,020	3,700	**SMP40GUU**
80	100	70	14(M12)	M12	3,820	7,940	6,100	**SMP50GUU**
88	115	80	14(M12)	M12	4,700	10,000	8,700	**SMP60GUU**

1N≒0.102kgf

ISOTECH, inc.
2299 Amber Dr. Suite 120, Hatfield PA 19440
Toll Free: 800-314-3332 Fax: 215-631-9148

SMJ TYPE

– Clearance Adjustable Type –

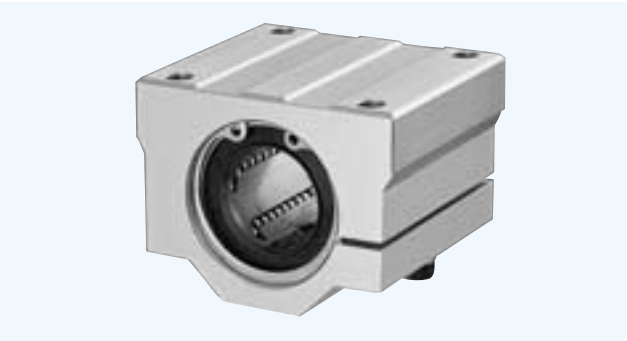

part number structure example

SMSJ | **25** | **G** | **UU**

specification

SMJ	standard
SMSJ	anticorrosion

inner contact diameter

seal

blank	without seal
UU	seals on both sides

retainer material

	standard	anticorrosion
blank	steel*	stainless*
G	resin	

*Size 10 is provided with resin retainer type only.

part number	inner contact diameter	outer dimensions						major dimensions	
		h	E	W	L	F	G	T	B
	mm	mm	mm	mm	mm	mm	mm	mm	mm
SMJ10GUU*	10	13	20	40	35	26	21	8	28
SMJ12GUU	12	15	21	42	36	28	24	8	30.5
SMJ13GUU	13	15	22	44	39	30	24.5	8	33
SMJ16GUU	16	19	25	50	44	38.5	32.5	9	36
SMJ20GUU	20	21	27	54	50	41	35	11	40
SMJ25GUU	25	26	38	76	67	51.5	42	12	54
SMJ30GUU	30	30	39	78	72	59.5	49	15	58
SMJ35GUU	35	34	45	90	80	68	54	18	70
SMJ40GUU	40	40	51	102	90	78	62	20	80
SMJ50GUU	50	52	61	122	110	102	80	25	100
SMJ60GUU	60	58	66	132	122	114	94	30	108

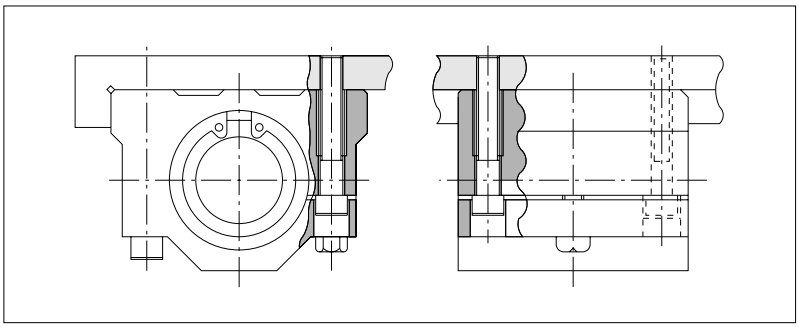

Please contact NB for information of counterbore machining for SMJ type as shown above.

ISOTECH, inc.

2299 Amber Dr. Suite 120, Hatfield PA 19440
Toll Free: 800-314-3332 Fax: 215-631-9148

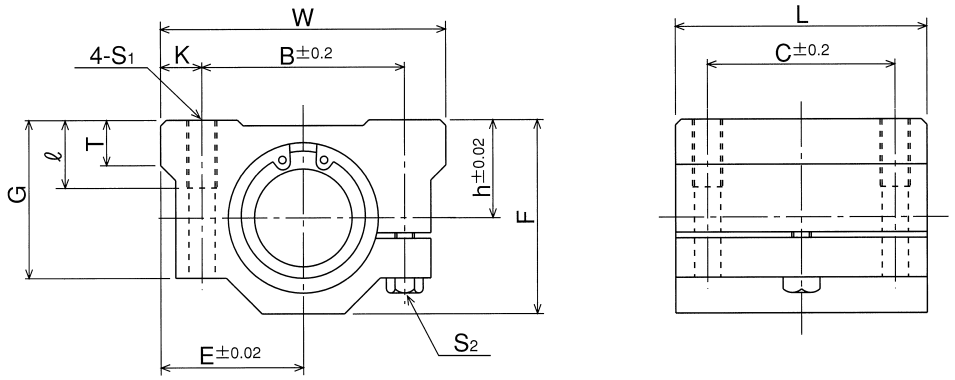

mounting dimensions				adjusting bolt size	basic load rating		mass	part number
C	K	S_1	ℓ	S_2	dynamic C	static Co		
mm	mm		mm		N	N	g	
21	6	M 5	12	M 4	372	549	92	**SMJ10GUU**
26	5.75	M 5	12	M 4	510	784	102	**SMJ12GUU**
26	5.5	M 5	12	M 4	510	784	120	**SMJ13GUU**
34	7	M 5	12	M 4	774	1,180	200	**SMJ16GUU**
40	7	M 6	12	M 5	882	1,370	255	**SMJ20GUU**
50	11	M 8	18	M 6	980	1,570	600	**SMJ25GUU**
58	10	M 8	18	M 6	1,570	2,740	735	**SMJ30GUU**
60	10	M 8	18	M 6	1,670	3,140	1,100	**SMJ35GUU**
60	11	M10	25	M 8	2,160	4,020	1,590	**SMJ40GUU**
80	11	M10	25	M 8	3,820	7,940	3,340	**SMJ50GUU**
90	12	M12	25	M10	4,700	10,000	4,270	**SMJ60GUU**

1N≒0.102kgf

ISOTECH, inc.
2299 Amber Dr. Suite 120, Hatfield PA 19440
Toll Free: 800-314-3332 Fax: 215-631-9148

SME TYPE

– Open Block Type –

part number structure example

SMSE | **25** | **G** | **UU**

specification

SMJ	standard
SMSE	anticorrosion

inner contact diameter

seal

blank	without seal
UU	seals on both sides

retainer material

	standard	anticorrosion
blank	steel*	stainless*
G	resin	

*Size 10 is provided with resin retainer type only.

part number	inner contact diameter mm	outer dimensions h mm	E mm	W mm	L mm	F mm	T mm	h_1 mm
		major dimensions						
SME10GUU*	10	15	18	36	32	24	7	6
SME13GUU	13	17	20	40	39	28	8	8.5
SME16GUU	16	20	22.5	45	45	33	9	10
SME20GUU	20	23	24	48	50	39	11	10
SME25GUU	25	27	30	60	65	47	14	11.5
SME30GUU	30	33	35	70	70	56	15	14
SME35GUU	35	37	40	80	80	63	18	16
SME40GUU	40	42	45	90	90	72	20	19
SME50GUU	50	53	60	120	110	92	25	23

ISOTECH, inc.
2299 Amber Dr. Suite 120, Hatfield PA 19440
Toll Free: 800-314-3332 Fax: 215-631-9148

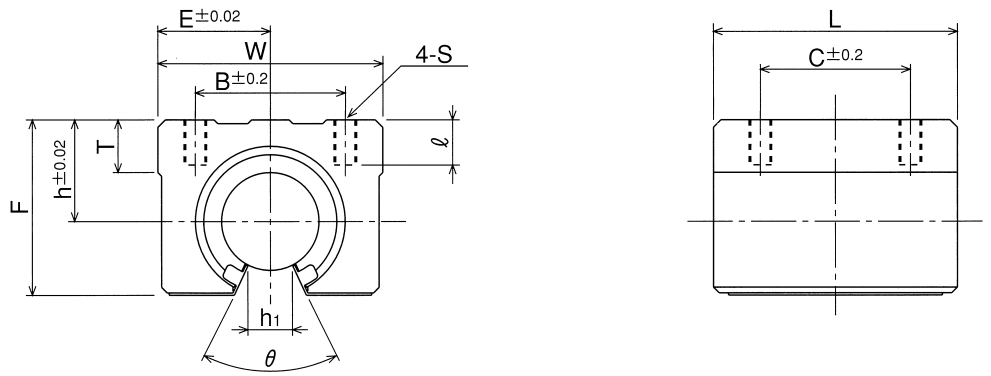

					basic load rating			
	mounting dimensions				dynamic	static	mass	part number
θ	B	C	S	ℓ	C	Co		
	mm	mm		mm	N	N	g	
80°	25	20	M 5	10	372	549	65	**SME10GUU**
80°	28	26	M 5	10	510	784	100	**SME13GUU**
80°	32	30	M 5	12	774	1,180	150	**SME16GUU**
60°	35	35	M 6	12	882	1,370	200	**SME20GUU**
50°	40	40	M 6	12	980	1,570	450	**SME25GUU**
50°	50	50	M 8	18	1,570	2,740	630	**SME30GUU**
50°	55	55	M 8	18	1,670	3,140	925	**SME35GUU**
50°	65	65	M10	20	2,160	4,020	1,330	**SME40GUU**
50°	94	80	M10	20	3,820	7,940	3,000	**SME50GUU**

1N≒0.102kgf

ISOTECH, inc.
2299 Amber Dr. Suite 120, Hatfield PA 19440
Toll Free: 800-314-3332 Fax: 215-631-9148

SME-W TYPE

– Double-wide Open Block Type –

part number structure example

SMSE | **25** | **G** | **W** | **UU**

specification

SME	standard
SMSE	anticorrosion

inner contact diameter

retainer material

	standard	anticorrosion
blank	steel*	stainless*
G	resin	

seal

blank	without seal
UU	seals on both sides

double-wide type

*Size 10 is provided with resin retainer type only.

part number	inner contact diameter	outer dimensions						major dimensions	
		h	E	W	L	F	T	N	h_1
	mm	mm	mm	mm	mm	mm	mm	mm	mm
SME10GWUU*	10	15	18	36	65	24	7	7.5	6
SME13GWUU	13	17	20	40	75	28	8	7.5	8.5
SME16GWUU	16	20	22.5	45	85	33	9	7.5	10
SME20GWUU	20	23	24	48	95	39	11	7.5	10
SME25GWUU	25	27	30	60	130	47	14	7.5	11.5
SME30GWUU	30	33	35	70	140	56	15	7.5	14

ISOTECH, inc.
2299 Amber Dr. Suite 120, Hatfield PA 19440
Toll Free: 800-314-3332 Fax: 215-631-9148

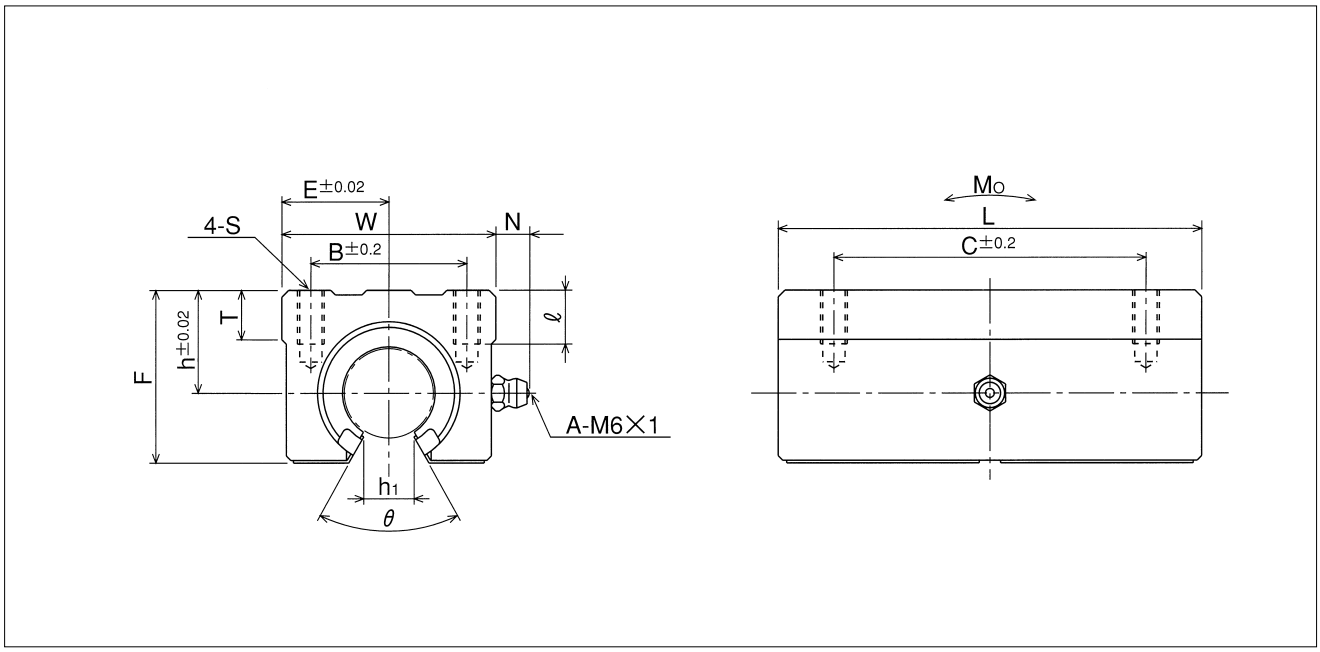

					basic load rating		allowable static moment	mass	part number
	mounting dimensions				dynamic	static			
θ	B	C	S	ℓ	C	Co	Mo		
	mm	mm		mm	N	N	N・m	g	
80°	25	40	M5	10	588	1,100	4.63	140	**SME10GWUU**
80°	28	50	M5	10	813	1,570	7.42	200	**SME13GWUU**
80°	32	60	M5	12	1,230	2,350	12.6	300	**SME16GWUU**
60°	35	70	M6	12	1,400	2,740	14.5	400	**SME20GWUU**
50°	40	90	M6	12	1,560	3,140	24.7	900	**SME25GWUU**
50°	50	100	M8	18	2,490	5,490	47.2	1,260	**SME30GWUU**

1N≒0.102kgf　1N・m≒0.102kgf・m

ISOTECH, inc.
2299 Amber Dr. Suite 120, Hatfield PA 19440
Toll Free: 800-314-3332 Fax: 215-631-9148

SMD TYPE

— Open Block with Clearance Adjustable Type —

part number structure example

SMSD | **25** | **G** | **UU**

specification

SMD	standard
SMSD	anticorrosion

inner contact diameter

seal

blank	without seal
UU	seals on both sides

retainer material

	standard	anticorrosion
blank	steel	stainless
G	resin	

part number	inner contact diameter	major dimensions							
		outer dimensions							
		h	E	W	L	F	T	G	h_1
	mm	mm	mm	mm	mm	mm	mm	mm	mm
SMD16GUU	16	20	25	50	45	33	9	6	10
SMD20GUU	20	23	27	54	50	39	11	7	10
SMD25GUU	25	27	38	76	65	47	14	7	11.5
SMD30GUU	30	33	39	78	70	56	15	7	14

ISOTECH, inc.

2299 Amber Dr. Suite 120, Hatfield PA 19440
Toll Free: 800-314-3332 Fax: 215-631-9148

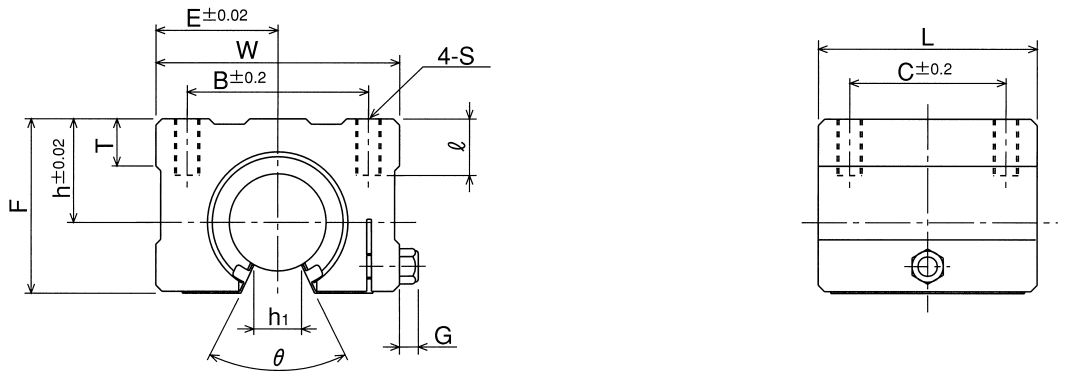

					basic load rating		mass	part number
	mounting dimensions				dynamic	static		
θ	B	C	S	ℓ	C	Co		
	mm	mm		mm	N	N	g	
80°	36	30	M5	12	774	1,180	170	**SMD16GUU**
60°	40	35	M6	12	882	1,370	240	**SMD20GUU**
50°	54	40	M6	12	980	1,570	580	**SMD25GUU**
50°	58	50	M8	18	1,570	2,740	720	**SMD30GUU**

1N≒0.102kgf

ISOTECH, inc.
2299 Amber Dr. Suite 120, Hatfield PA 19440
Toll Free: 800-314-3332 Fax: 215-631-9148

RB TYPE

− Resin Block Type −

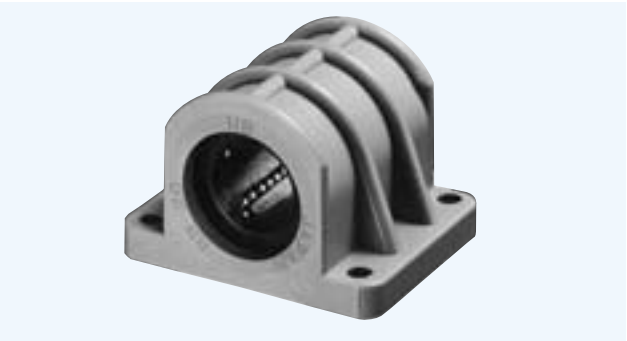

part number structure example

RB 20

RB type

inner contact diameter

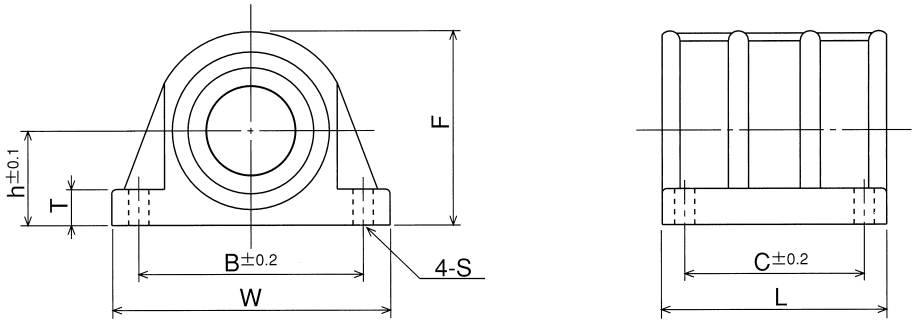

part number	major dimensions										basic load rating		mass
	inner contact diameter		outer dimensions				dimension				dynamic	static	
		tolerance	h	W	L	F	T	B	C	S	C	Co	
	mm	μm	mm	mm	mm	mm	mm	mm	mm	mm	N	N	g
RB10	10	0 −9	13	45	35	26.5	6	35	21	4.5	372	549	43
RB12	12		15	50	36	30	6.5	40	26	4.5	510	784	50
RB13	13		15	50	39	31	6.5	40	26	4.5	510	784	63
RB16	16		19	56	44	38.5	7	46	34	4.5	774	1,180	99
RB20	20	0/−10	21	62	50	43	8	50	40	5.5	882	1,370	127

(RB type has side seals as standard.)

1N≒0.102kgf

ISOTECH, inc.

2299 Amber Dr. Suite 120, Hatfield PA 19440
Toll Free: 800-314-3332 Fax: 215-631-9148